Renewable Energy Demand
A Case Study of California

R E P P

Renewable Energy Policy Project

George Sterzinger
Jerry Stevens

Technical Report | OCT 2006

REPP STATE REPORTS

A national program to develop renewable energy will provide significant benefits to states and regions well beyond where projects are developed. A national program will greatly stimulate demand for manufactured components. It is clear from earlier Reports undertaken by the Renewable Energy Policy Project that many of the states and regions that have suffered the greatest loss of manufacturing jobs have a significant concentration of manufacturing potential to supply those components. This potential is little understood even by those closest to it and who stand to benefit the most from it. The REPP State Reports intend to provide an explanation of how this manufacturing potential is calculated and offer detailed analysis showing for a state, region, and county the potential for each of the 43 industrial codes that comprise the major component parts for the major renewable energy technologies. It is hoped that the Reports will spur interest at the local level to actually identify the specific firms that could benefit from a national program and begin the discussion as to how best to tie reinvigorated domestic manufacturing activity into a national program to develop renewable energy.

Component Manufacturing:
California's Future in the Renewable Energy Industry

In August 2006 California passed legislation capping the state's CO2 emissions. The legislation stabilizes California's emissions at 1990 levels by 2020; establishes a mandatory emissions reporting program; and establishes a "cap and trade" program allowing businesses to buy and sell emissions rights.

Skeptics of this action were quick to point out that the climate problem is global and California, acting alone as a single state, could not hope to stabilize it. Supporters responded that the point of the legislation was not so much to solve the problem by itself but to set an example that would hopefully move the United States as a whole to take on the problem. Not coincidentally, they also pointed out that by moving early California industry could be in a position to benefit from the national commitment when it came.

This Report analyses the renewable energy industry assuming that the United States moves to stabilize carbon emissions. As explained more fully below, the Report assumes a "wedge" of renewable energy is developed to stabilize the emissions from the US electric sector. The Report looks at how that major new demand for renewable energy will trickle down to create new demand for the component parts that make up the major renewable energy technologies.

Stabilizing emissions of carbon requires adding 18,500 MW of new renewable projects each year. The Report looks at the total demand generated by a ten-year stabilization program and tracks that demand down to the individual industries capable of manufacturing the components. The national demand is allocated to individual states and eventually to the county level. California, of all the states, has the greatest potential to generate new manufacturing activity to meet this demand. In all, there are more than 5400 firms in California that are currently active in the industrial sectors that could supply the component parts to meet the demand necessary to deliver a wedge. In addition, the demand can support the creation of more than 95,000 new jobs related to the expanded manufacturing activity.

The Report also looks at the likelihood that new demand on the scale necessary to stabilize carbon emissions would lead to bottlenecks in the component supply chain. To analyze the likelihood of this occurring, the Report looks at the incremental, annual demand for components as a percent of the available unused industrial capacity for each of the major industrial sectors. For example, climate stabilization will create an annual demand for approximately $1 billion for wind turbine gearboxes. Currently, this industrial sector is running at close to full capacity. Department of Commerce data shows an available, unused capacity of roughly $15 million. In other words, any major push for renewable installations would very likely run into an immediate shortage of these critical components. Looking more closely at this carbon stabilization program reveals that there is a very great likelihood that severe bottlenecks will develop in many critical sectors. For wind and PV, the annual, new demand will greatly exceed available industrial capacity for more than 50% of the industrial sectors. All technologies face a bottleneck in one or more critical components.

California, by acting early, can influence national action to accelerate climate programs. By virtue of its industrial base, California stands to benefit from the increased demand for renewable technology. California can also anticipate bottlenecks and begin developing the domestic industries that will allow a strong renewable industry to meet climate goals. To capture the potential and avoid bottlenecks will require aggressive investment from the private sector. Public policy and incentives can and should be used to accelerate that action.

STABILIZING CARBON EMISSIONS

There are many ways to stabilize carbon emissions. For this Report REPP has used the "wedge" analysis developed by Pacala and Socolow. (Pacala, S. and R. Socolow, Stabilization Wedges: Solving the Climate Problem for the Next 50 Years wit Current Technologies, Science, 13 August 2004, Vol. 305) One of the breakthroughs that any complex issue like climate stabilization policy must make to gain public awareness and acceptance is to provide the public with a clear, comprehensible explanation of the problem and a solution that they can understand and believe will work. Their recent article in Science provided that threshold clarity for climate stabilization efforts. To stabilize carbon emissions, the authors proposed to split the growth of carbon emissions into seven parts or wedges and look for the set of already existing technologies that can generate the required electricity without a wedge of carbon emissions.

An international program of stabilization based on current levels of global emissions would make the United States responsible for about two wedges. Since transportation and electricity generation each provide about half the emissions, electricity generation in the United States would be responsible for about one wedge.

As the Science article makes clear there are a number of programs all using existing technologies that can be used to provide a wedge of carbon reductions but for this Report we look at what would be required to provide a wedge from renewable energy technologies.

The calculation of what is required to stabilize these emissions is exceedingly simple. The base of carbon emissions now is 7 billion metric tons per year of carbon growing at 1.5% per year. For the first year, global growth would be 105 million tons and to stabilize or remove the growth each wedge would require removing 15 million tons of carbon. Since the most common emission from the generation of electricity is CO2, the 15 million tons of carbon per wedge would translate to 55 million tons of CO2 per year. Coal generation emits on average 2.1 pounds of CO2 per kWh produced, that translates to approximately 58 billion kWh generated with zero CO2 emissions to capture one wedge. ("Carbon Dioxide Emissions from the Generation of Electric Power in the United States" July 2000 Department of Energy Washington, DC 20585 Environmental Protection Agency Washington DC 20460). The assumption that each CO2 free kWh removed a kWh of coal fired generation rather than natural gas fired generation is very likely imprecise. It is used here as a way to begin the discussion of how this type of program might work. It is not meant as a definitive resolution of these complex issues regarding electric generation dispatch.) To achieve these reductions would require the addition of between 18,000 and 19,000 MW per year of wind assuming an average capacity factor of 35%. (Biomass and geothermal resources have much higher capacity factors and would require smaller capacity additions to achieve the CO2 reduction.) Once you hit the initial stabilization target the amount you need to add to hold emissions stable in the next year and for each year beyond that is exactly the same as the initial amount.

ANALYSING THE DEMAND FOR COMPONENTS

It is well understood that a national program to develop renewable energy will benefit the regions and states that have the best renewable resource base – solar, wind, biomass and geothermal. What is less appreciated is that a national program will also create a demand for billions of dollars of components, the parts that make up the finished renewable plants. This demand could if accompanied by appropriate incentives provide important new markets for domestic manufacturers that are already manufacturing equipment similar to the components that go into new renewable generation. It is the intent of this Report to outline the potential for California from a national

commitment to accelerate renewable energy development. In 2004, the Renewable Energy Policy Project completed an analysis of modern, large wind turbine technologies. The results of this analysis were very encouraging both for the country as a whole and for California in particular. The Report showed:

> "Investment in new wind will create a demand for all of the components that make up a wind generator. As a rule of thumb, every 1000 MW requires a $1 Billion investment in rotors, generators, towers and other related investments… First we determine how the total installed cost of the new wind development will flow into demand for each of the 20 separate components of the turbines (grouped into 5 categories). Second, we spread the total demand among the regions of the country by allocating the …investment according to the number of employees at firms identified by the NAICS codes. The number of employees is used rather than number of firms to account for the different impact of large vs. small companies, and hence to more accurately distribute the investment. This produces a "map" of manufacturing activity across the United States based on firms that have the technical potential to become active manufacturers of wind turbine components. Third, we translate the regional dollar allocation by assuming that all component manufacturing has the same ratio of jobs/total investment of 3000 FTE jobs/$1 billion of investment…The results of this initial research into the distribution of manufacturing activity are encouraging. Twenty-five states have firms currently active in manufacturing components or sub-components for wind turbines; all fifty states have firms with the technical potential to become active. The table below shows the twenty states with would receive the greatest portion of the investment, based on the number of employees at potentially active firms identified by the NAICS codes for wind components."

I. National Rankings

The methodology we developed for the Wind Report has since been extended to cover photovoltaics, bio-mass steam generators, and geothermal technologies. For the combined renewable technologies, we assumed that 185,000 MW of wind would be developed, 23,150 MW of photovoltaic, 21,760 MW of biomass, and 15,190 MW of geothermal.

Summary of National Development, Resulting Investment and Jobs

	Number of MW	Number of Firms	Millions $ Investment	New FTE Jobs
Wind	124,900	16,480	$62,338	398,470
Solar	23,150	10,272	$69,624	298,194
Geothermal	15,190	3,926	$15,330	72,324
Biomass	21,760	12,020	$13,248	81,615
Total:	185,000	42,698	$160,541	850,603

Nearly 43,000 firms throughout the United States operate in industries related to the manufacturing of components that go into renewable energy systems. If the 185,000 MW of renewable energy assumed in this model were to be developed, these companies have the potential to fill the demand for new components that would be generated. This national development would represent nearly $160.5 billion dollars of manufacturing investment, and would result in more than 850,600 new jobs.

California is particularly well positioned to benefit from such a national development. As shown in the tables below, California stands to receive nearly 95,600 new jobs and $20.9 billion dollars of investment in manufacturing components to supply this national development of renewables. California is ranked first among states in terms of job gain, and first for potential investment. (Note: The wind figures shown here are different from those in REPP's initial wind manufacturing

report because we are using a more refined model that defines cost information at the component level.)

Manufacturing Jobs and Investment for 185,000 MW

Location	# of Firms	Jobs Wind	Jobs Solar	Jobs Geothermal	Jobs Biomass	Jobs Total
California	5,409	32,046	48,896	8,465	6,209	95,616
Texas	3,358	25,044	23,221	4,660	7,175	60,100
Illinois	2,289	30,010	19,298	3,396	3,875	56,579
Ohio	2,465	29,820	11,833	5,079	4,537	51,269
New York	1,925	18,523	14,617	8,150	6,640	47,930
Pennsylvania	2,188	19,588	15,767	3,402	3,911	42,668
Indiana	1,321	25,180	7,485	3,191	3,365	39,221
Michigan	2,050	24,350	6,644	1,502	2,281	34,777
North Carolina	1,096	10,964	11,062	2,810	3,708	28,544
Missouri	785	10,260	7,532	2,907	2,097	22,796

II. California and California Counties Information

As shown in the wind report on manufacturing activity, California is particularly well positioned to benefit from wind energy development. When the picture is expanded to include other renewable energy technologies, the potential benefit to California manufacturing industries is even greater. As in the case of wind technology, California has a manufacturing base in most of the industries relevant to the production of renewable energy components.

Potential Manufacturing Benefit to California from National Development

	Number of Firms	Investment (Millions)	FTE Jobs
Wind	1,943	$5,449.50	32,046
Solar	1,788	$12,115.90	48,896
Geothermal	348	$2,181.10	8,465
Biomass	1,330	$1,165.30	6,209
Total:	5,409	$20,911.80	95,616

This report and the previous wind manufacturing report identify that California stands to benefit greatly from national renewable energy development through the chain of manufacturing. The next step is to identify ways to take specific action to move towards making this potential benefit a reality. In order to do so, it would be useful to have more specific information about the location and nature of the manufacturing potential in California. One important feature of the census information for manufacturing is that it goes down to the county level. This county level information makes it possible to take a closer look at the locations within a state that have the potential to manufacture components related to renewable energy. The methodology for arriving at investment and jobs numbers at the county level is the same as for the state level. Each county

receives a portion of the total investment from the national program, according to the percentage of firms in each of the relevant NAICS industries operating in that county. Jobs are distributed in the same manner.

Table: Top 20 Counties in California

	Wind		Solar		Geothermal		Biomass		Totals	
County	**Millions**	**Jobs**	**Millions**	**Jobs**	**Millions**	**Jobs**	**Millions**	**Jobs**	**Millions**	**Jobs**
Santa Clara	$623.1	3,351	$5,139.3	16,616	$295.2	993	$108.3	445	$6,165.9	21,405
Los Angeles	$1,228.8	7,816	$1,838.5	8,955	$311.2	1,413	$269.7	1,662	$3,648.2	19,846
San Diego	$948.7	4,352	$781.3	4,032	$816.3	2,821	$276.6	1,125	$2,822.9	12,330
Orange	$712.3	4,914	$1,229.7	6,546	$75.6	445	$89.3	603	$2,106.9	12,508
Alameda	$282.1	1,859	$532.7	2,012	$11.5	81	$13.7	95	$840.0	4,047
San Bernadino	$291.9	1,895	$377.2	1,770	$22.2	114	$26.3	171	$717.6	3,950
Ventura	$173.7	1,191	$366.4	1,373	$17.5	115	$26.4	186	$584.0	2,865
San Mateo	$32.9	225	$498.7	2,234	$0.4	3	$3.5	22	$535.5	2,484
Riverside	$150.6	1,115	$290.0	1,114	$8.0	47	$13.6	89	$462.2	2,365
Fresno	$84.5	540	$196.2	880	$39.6	229	$15.1	93	$335.4	1,742
San Joaquin	$123.8	752	$123.6	561	$1.1	7	$3.5	24	$252.0	1,344
Sacramento	$44.9	290	$147.4	407	$2.8	12	$34.9	237	$230.0	946
Sonoma	$38.8	277	$67.7	371	$40.7	287	$46.4	329	$193.6	1,264
Placer	$14.0	86	$138.6	410	$0.2	0	$0.4	2	$153.2	498
Tulare	$54.5	384	$83.0	509	$2.2	13	$6.6	45	$146.3	951
Contra Costa	$44.0	284	$79.4	420	$1.9	10	$7.3	45	$132.6	759
Solano	$39.1	252	$2.7	16	$19.3	128	$58.1	412	$119.2	808
Kern	$31.1	188	$39.6	158	$23.0	159	$12.0	82	$105.7	587
Santa Barbara	$28.5	179	$61.6	234	$5.2	25	$7.5	48	$102.8	486
Santa Cruz	$13.3	92	$69.9	191	$10.2	56	$5.7	37	$99.1	376

The table above lists the 20 counties in California that would receive the greatest investment in manufacturing from the national development of wind, solar PV, geothermal, and dedicated biomass. Here is how we made those calculations. The investment figure is arrived at by starting with a number of MW of new capacity for the entire U.S. In this case, we use 124,900 MW new wind for this report. This 124,900 MW results in a total manufacturing cost that is broken down into individual components. Each components share is calculated based on specific cost information ($/MW) for each part. Each component also has an NAICS industry associated with it – for example, the wind turbine tower falls under the code 332312 "Fabricated Structural Metal". Then the total dollars that go into making towers and the other components for the 124,900 MW of wind are divided into each county based on the relative number of firms operating in 332312 in that county (actually, the number of employees working at those firms is used to account for different size companies).This process is repeated for each part, and then summed to get the total for each technology. The number of new FTE Jobs is also based on census information. By combining the number of employees working in a given industry, the total value of components produced by that industry, as well as the cost per megawatt for those components, we were able to calculate a ratio of Jobs/MW for each NAICS industry for each of the four technologies. This number of jobs is then divided geographically in the same way that the investment was. To take a closer look at a particular county of interest, we can break out the investment and job allocation by specific NAICS codes, in order to examine the particular kinds of manufacturing that are relevant to a given county. As an example of this, we look at the California County which had the most renewable energy manufacturing potential: Santa Clara. While a variety of data is available, three items seemed

particularly relevant. The number firms operating in the county in each NAICS industry gives an idea of the manufacturing base located in the county for a particular industry, while the investment and new job creation, using the method described above, provide an idea of the potential for the county to benefit in particular industries from the national development of renewable energy. The following tables break out the results for Santa Clara County.

Santa Clara, CA

Wind

NAICS	NAICS Description	# Of Firms in NAICS	Millions $ Investment	New FTE Jobs
335999	Electronic Equipment and Components, NEC	33	$296.7	1,923
333611	Turbines, and Turbine Generators, and Turbine Generator Sets	1	$211.3	705
326199	All Other Plastics Product Manufacturing	40	$37.6	300
334418	Printed circuits and electronics assemblies	50	$32.8	139
334519	Measuring and Controlling Devices	19	$31.2	206
332312	Fabricated Structural Metal	11	$13.3	76
332991	Ball and Roller Bearings	1	$0.1	1
335312	Motors and Generators	1	$0.1	1
Total:		156	$623.1	3,351

Solar

NAICS	NAICS Description	# Of Firms in NAICS	Millions $ Investment	New FTE Jobs
334413	Semiconductors and Related Devices	195	$4,167.0	10,568
335999	Electronic Equipment and Components, NEC	33	$744.4	4,826
334515	Instrument Manufacturing for Measuring and Testing	63	$166.7	760
335931	Current-Carrying Wiring Device Manufacturing	8	$29.4	224
332322	Sheet Metal Work Manufacturing	74	$25.4	208
335313	Switchgear and Switchboard Apparatus Manufacturing	5	$3.3	18
335911	Storage Batteries	1	$1.3	7
326113	Unlaminated Plastics Film and Sheet (Except Packaging)	2	$0.9	4
325211	Plastics Material and Resin Manufacturing	2	$0.9	1
Total:		383	$5,139.3	16,616

Geothermal

NAICS	NAICS Description	# of Firms in NAICS	Millions $ Investment	New FTE Jobs
333611	Turbines, and Turbine Generators, and Turbine Generator Sets	1	$292.9	977
332410	Power Boiler and Heat Exchanger Manufacturing	2	$1.8	13
332420	Metal Tank (Heavy Gauge) Manufacturing	2	$0.3	2
333912	Air and Gas Compressor Manufacturing	1	$0.2	1
Total:		6	$295.2	993

III. Component Breakdown and NAICS Methodology

Assessing the dispersion of manufacturing of the components of renewable energy systems proceeds in 3 steps, First we identify the component parts that make up each system, then we identify a relevant NAICS code for each component, and finally we use the census data to identify potential manufacturing activity.

A. Component Breakdown

In doing so, we must decide what constitutes a major component – for this study we consider a part that would likely be sold by a manufacturer as a single unit, and not the parts that went into that unit further up the supply chain. For example, we consider the gearbox in a wind turbine as a component, but not the bolts that went into making the gearbox. For each of four technologies –

wind, solar PV, geothermal, and biomass generation – we identified the most prevalent modern technology, and then identified the major components that go into each.

1. Wind Technology

For wind technology, this Report looks at utility scale modern wind turbines, which are three bladed, upwind, horizontal axis machines, typically larger than 1 MW capacity. In this type of wind turbine, wind flows over three large composite blades mounted on a rotor, causing them to rotate. The rotational energy is transferred through a gearbox to a generator, where it is converted into electricity. Almost all wind turbines currently being installed for power generation for electric utilities are of this kind. We identified 19 separate components for the utility scale wind turbine, many of which are shown below in Figure 1. For a complete list of the components and a description and photograph of each, please refer to Appendix A.

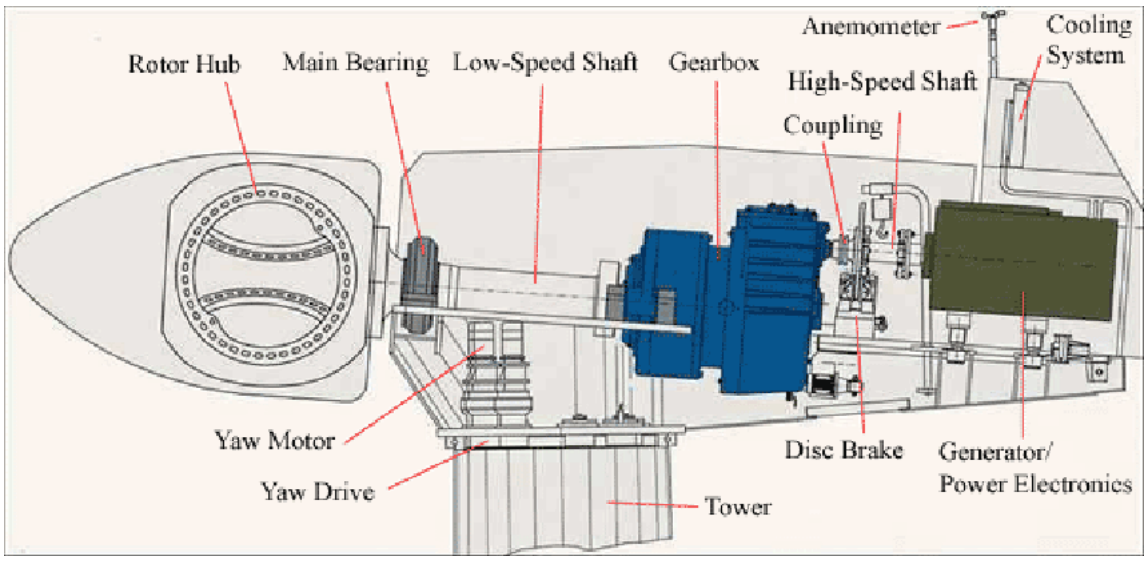

Figure 1 – Wind Turbine Component Diagram

2. Solar Technology

For solar photovoltaics', we considered crystalline silicon modules, as these are by far the most common type of PV module currently deployed. Although not specifically considered in this report, amorphous silicon and other "thin-film" modules are also produced in small amounts in a handful of countries. However, with the exception of the glass top plate and the framing structure, the components for both systems are practically the same and so much of what is written in this report will also apply to thin-film modules. All PV systems convert the energy from photons striking the cells into electrical current. This direct current electricity is then either stored in a battery for later use, or converted into AC power by an inverter, which can then be connected to household appliances and to the electric grid. We identified 13 separate components for solar PV systems.

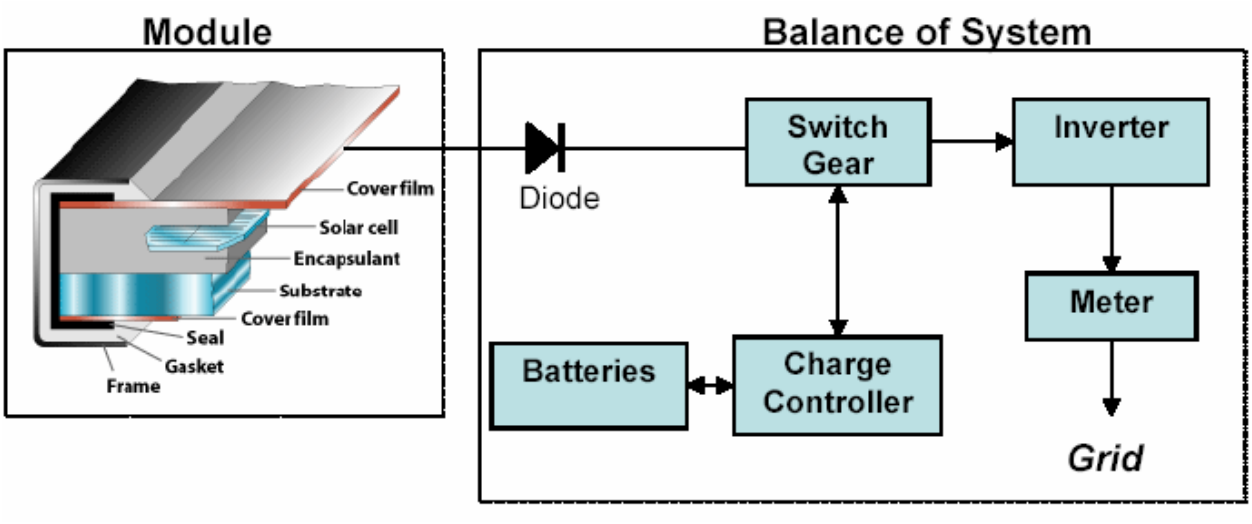

Figure 2 – Solar PV Component Diagram

3. Geothermal Technology

For geothermal power generation, we considered two technologies which represent almost all of the current operating and planned plants – flash steam and binary cycle. Flash steam plants operate by expanding the hot geothermal fluid to make steam, which is then passed through a steam turbine-generator set to make electricity. The steam is then condensed, and in most cases the excess fluid is re-injected underground to preserve the resource. In a binary plant, a fluid with a low boiling point is circulated in a closed loop, receiving heat from the geothermal fluid through a heat exchanger, vaporizing, being expanded through a turbine-generator, and then re-condensed. Most of the components that make up these plants are similar, such as various pumps, heat exchangers and piping, but a handful of parts are distinct for each technology. Listed below are the components that both technologies have in common, and then those that are specialized for each type of plant. The figures below illustrate the major components of a flash steam plant and a binary cycle plant.

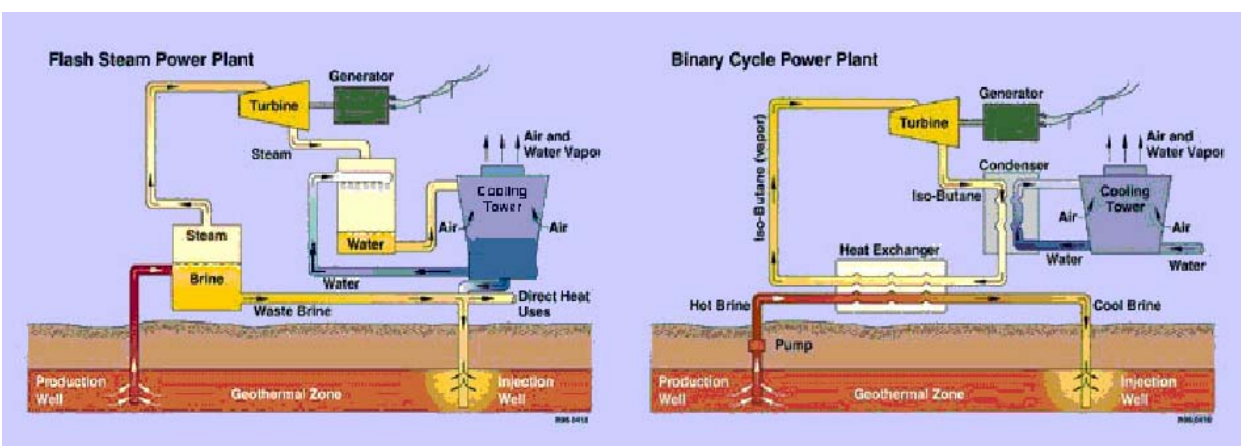

Figure 3 – Geothermal Component Diagram

4. Biomass Technology

For biomass power generation, we looked at dedicated biomass plants (as opposed to co-firing with coal) that burn biomass in a boiler to generate steam. The steam is then passed through a steam turbine-generator, just like the kind used in coal or other fossil-fuel plants, to generate electricity. While other methods of power-generation from biomass exist, such as gasification or anaerobic digestion, direct steam plants are the most common, and are the only technology widely ready for commercialization. We identified 33 separate components for a biomass-fired steam plant.

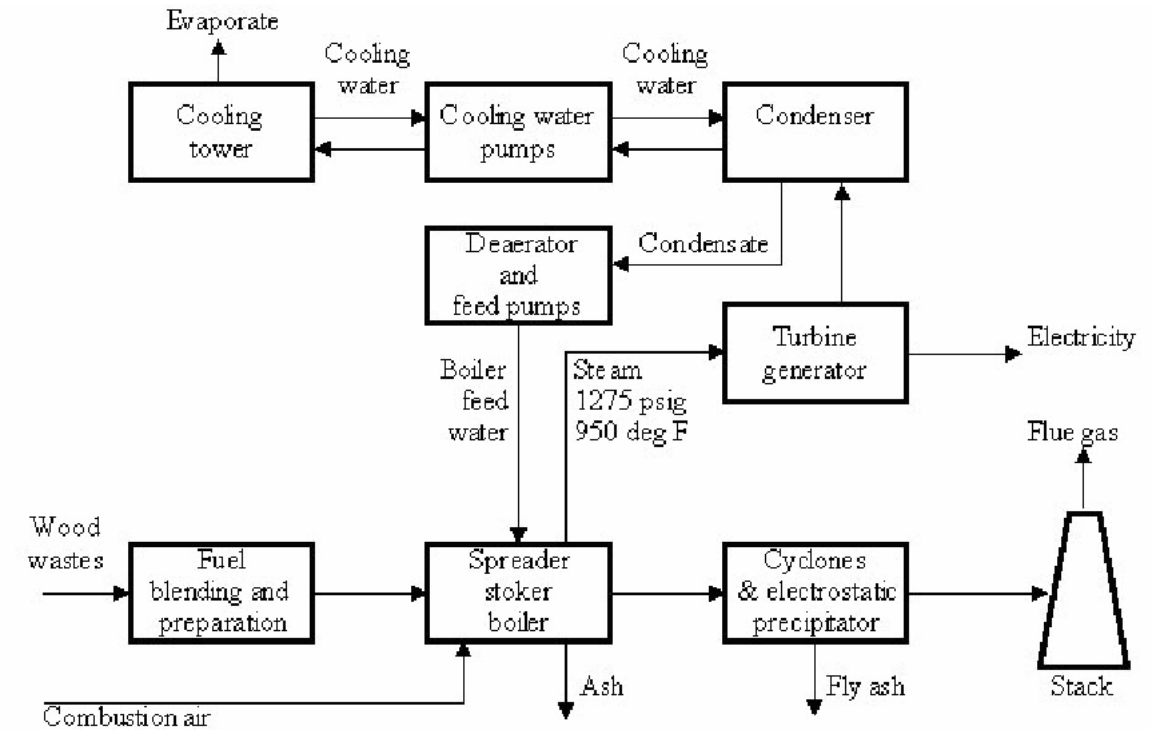

Figure 4 – Direct-fired Biomass Steam Plant Component Diagram

B. Identifying the NAICS Codes

Manufacturing activity has historically been tracked by Standard Industrial Classification (SIC) codes. The four-digit SIC code was developed in the 1930's to classify businesses by the type of activity in which they are primarily engaged and to promote the comparability of business data to describe various aspects of the U.S. economy. In 1997 the SIC was replaced by the North American Industry Classification System (NAICS). In the Economic Census conducted by the U.S. Census Bureau, every firm operating in North America reports one or more NAICS codes, indicating what types of products or services they provide. Companies reporting the same NAICS code are involved in similar activities, for example every company that reports "333911" manufactures some type of pump. Using this system, REPP was able to tabulate the companies involved in activities similar to the manufacturing of renewable energy components.

The NAICS codes have several levels of detail, up to ten digits, with each digit indicating a higher level of detail. For example, a first digit of 3 indicates Manufacturing, 333 is "Machinery Manufacturing," 333911 is "Pump and Pumping Equipment Manufacturing," and 333911148M is "All other centrifugal pumps, over 6 in. discharge." For this report, we matched each component with a 10-digit code, the highest level of detail in the NAICS, in order to ensure that we had

accurately identified the correct code. We then went back up the hierarchy to the 6-digit code for interfacing with the census data.

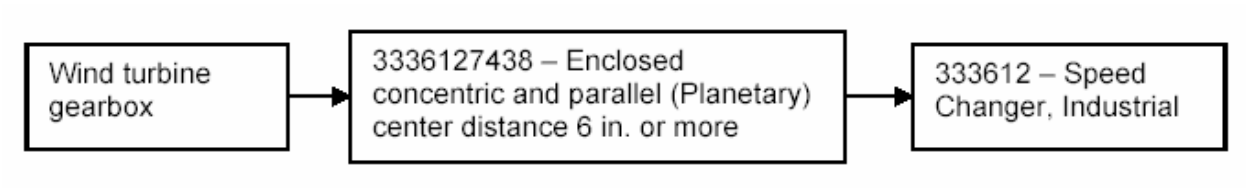

Advantages to Using the 6-digit Codes
The 6-digit NAICS codes replaced the 4-digit SIC codes, which were the highest level of detail available in the SIC. Hence the 6-digit NAICS are the standard level reported by all companies in North America, with the 10-digit codes providing additional detail. The U.S. Census Bureau itself provides data primarily at the 6-digit level, reporting 10 only at the request of a special study. Furthermore, for a given NAICS code and a given geographical area, such as a county, if there are less than 2 companies operating or if one company is dominant, disclosure rules require the Census to not report information for that particular code and for that area, to avoid disclosing private company information. The small number of companies reporting in a given 10-digit code makes it unlikely that information would be available for all codes and states. Therefore, for this study we had to rely on the 6-digit codes. Additionally, the specificity of a 10-digit code could have excluded companies with good potential for entering the geothermal market, which the 6- digit industry code includes.

Caveat to Using the 6-digit Codes
When interpreting the results of a 6-digit code search, it is important to be aware of the potential broadness of companies included. For example, under the 6-digit NAICS, charge controllers and inverters fall under "Electronic Equipment and Components, Not Easily Classified." Along with rectifying equipment, such as inverters, this also includes laser power supplies and ultrasound equipment. However, this is mostly a problem for one or two particular codes, the majority of NAICS codes used in this study have much less variation of product type. Furthermore, even a company that makes laser power supplies has a significant advantage over a company starting from scratch, as they have basic knowledge and capabilities for making sophisticated electrical equipment.

C. Identifying the Economic Impact of Renewables Manufacturing

To provide an estimate of market development, we must start with a figure for the amount of development to occur in each of the technologies considered in this report. This assumed development figure drives the demand for manufacturing of the components, which in turn creates the potential for economic development in locations that could supply these components. The intention of this report is not to take guesses at the number of MW of renewable energy likely to be installed in the next 20 years; rather we simply take some reasonable numbers to provide an estimate of the economic potential. The table below lists the drivers we used for each of the four technologies, and their source.

Sources for Assumed National Development

Energy Source	Number of New MW	Source
Wind	124,900	Pro-rated Carbon Stabilization Wedge
Solar PV	15,190	Pro-rated Carbon Stabilization Wedge
Geothermal	23,150	Pro-rated Carbon Stabilization Wedge
Biomass – Dedicated Steam	21,760	Pro-rated Carbon Stabilization Wedge

Investment Allocation

Having identified components and a NAICS code for each, the next step in determining the potential involvement of this manufacturing base in the development is to determine how demand will flow into each industry based on component cost information. This cost information results in a dollar amount allocated to each industry. Each component is assigned a specific cost ($/MW) based on research by REPP into the most relevant current cost study for each technology. The table below summarizes the sources for cost information for each of the technologies.

Sources for Component Cost Information

Energy Source	Component Cost Information Source
Wind	NREL WindPACT Study
Solar PV	Solar PV Industry Roadmap, as well as NREL Solar Energy Technologies Program
Geothermal	EPRI "Next Generation Geothermal Power Plants"
Biomass – Dedicated Steam	Capital costs for the McNeil Generating Station in Burlington, VT

The cost allocated to each component group is then allocated to states and geographic regions according to the number of employees working for companies with the technical potential to manufacture components in that component group. The number of employees is used rather than number of firms to account for variation in size of the firms. A firm employing 1,000 people will bring a larger investment to a region than one employing 10. To illustrate the allocation, consider the Fabricated Structural Metal, which has a specific cost of approximately $123,000 per MW of wind capacity. Multiplying by the 124,900 MW of wind assumed as the driving development results in a total investment in Fabricated Structural Metal manufacturing of $15.4 billion. This $15.4 billion is now allocated geographically. Consider Santa Clara county in California, which has 76 employees working at firms operating in the NAICS code for Fabricated Structural Metal (NAICS Code – 332312), as compared to 106,161 employees in the entire U.S. Therefore, Santa Clara gets 76/106,161 or 0.072% of the $15.4 billion dollars, which means around $11.1 million goes to Santa Clara for the NAICS industry associated with Fabricated Structural Metal (you can check this by looking at the Santa Clara Wind breakdown in Section II of this report). To get the total investment for given county or state, we then simply sum up the investment for all of the NAICS codes.

Jobs Allocation

We are also interested in investigating the impact of the national development of renewable energy on job creation. To do this, we assign a manufacturing job creation ratio to each of the component industry, a number of jobs created manufacturing in a certain industry per MW of new capacity. This ratio is calculated, again using the NAICS census data in combination with the specific cost information discussed above. For each NAICS code, the census reports the number of employees working in that industry, as well as the total value of products shipped from that industry. We make the assumption that this shipped value of a product is the same value represented in the specific cost information used for the investment allocation (the $/MW for each component), Combining

these two pieces of information results in a number of employees per MW. Because the census value of shipments is calculated on an annual basis, this "number of employees" is equivalent to number of annual jobs, or an amount of labor equal to the number of employees' times 2000 hours. The table below shows the total jobs/MW number for each technology, summing over all of the component parts:

Energy Source	Number of Jobs/MW
Wind	7.5
Solar	62.6
Geothermal	8.25
Biomass – Dedicated Steam	10.5

REPP had recently completed a study of the labor that goes into renewables which included a detailed survey of employment related to wind and solar PV. The overall manufacturing jobs/MW numbers found using the NAICS census method and shown in the table above agree well with the numbers found in the previous REPP study, giving confidence in the above method. Having obtained a jobs/MW number, the jobs are allocated geographically according to the census manufacturing in the exact same manner that the investment was allocated.

D. Identifying Potential Supply Bottlenecks

To identify potential bottlenecks in the component supply chain we first established for each NAICS code the current production capacity and compared that to the maximum available production capacity. For each NAICS code this difference established an Available Production Capacity. Available Production Capacity can then be compared to the Incremental Demand for parts from that NAICS code. The Incremental Demand is the annual demand related to the installation of the wedge of 18,500 MW. If the Incremental Demand is greater than the total Available Production Capacity, there is a strong chance of a bottleneck developing. Identifying these bottlenecks should be met with a concerted effort to begin building industrial capacity to avoid them.

TABLE: IDENTIFICATION OF BOTTLENECKS IN WIND COMPONENT PARTS

Wind 10 Digit NAICS Codes	Incremental Demand	Available Production Capacity	Incremental Demand as a % of Available Production Capacity
Nacelle Case	$132,643	$55,931	237.15%
Rotor Blade	$1,133,332	$477,888	237.15%
Blade Extender	N/A	N/A	N/A
Tower Flange and Bolts	N/A	$25,554	N/A
Hub	$471,700	N/A	N/A
Nacelle Frame	$251,300	$248,692	101.05%
Towers	$1,476,550	$381,607	386.93%
Bearings	$145,075	$240,042	60.44%
Cooling System	$19,200	$137,235	13.99%
Generator	$551,900	$99,554	554.37%
Gear Box	$942,025	$14,593	6455.34%
Brakes	$33,606	$75,786	44.34%
Coupling	$16,015	$58,101	27.56%
Shafts	$135,254	$173,851	77.80%
Electronic Controller	$44,125	N/A	N/A
Sensors/Data Loggers	$117,525	$315,294	37.27%
Anemometer	$0	$315,294	0.00%

Pitch Drive	$262,942	$458,739	57.32%
Yaw Drive	$58,433	$101,945	57.32%
Power Electronics	$447,150	$191,626	233.34%

As the two Tables show that for Wind and PV there are severe bottlenecks in more than half of the crucial components.

TABLE: IDENTIFICATION OF BOTTLENECKS IN PV COMPONENT PARTS

10 Digit NAICS Code	Incremental Demand	Available Production Capacity	Incremental Demand as a % of Available Production Capacity
Encapsulant	$248,575	$1,099,869	22.60%
Rear Layer	$260,300	$1,520,380	17.12%
Top surface	$479,950	$50,904	942.86%
Wiring	$241,550	$57,176	422.47%
Frame	$118,050	$116,924	100.96%
Blocking Diode	$93,327	$75,510	123.59%
Solar cells	$2,691,123	$1,282,194	209.88%
Complete Module			
Meter	$111,900	$293,423	38.14%
Circuit Breakers and Fuses	$108,875	$343,195	31.72%
Switch Gear	$105,310	$861,303	12.23%
Electrical Connections	$400,388	$103,055	388.52%
Charge Controller	$477,569	$50,056	954.07%
Inverter	$643,392	$171,306	375.58%

A more complete explanation of the process and data used to identify potential bottlenecks is presented in Appendix D.